PINEMAC®

# CNC Woodworking Multitasking Mill Turn Machine

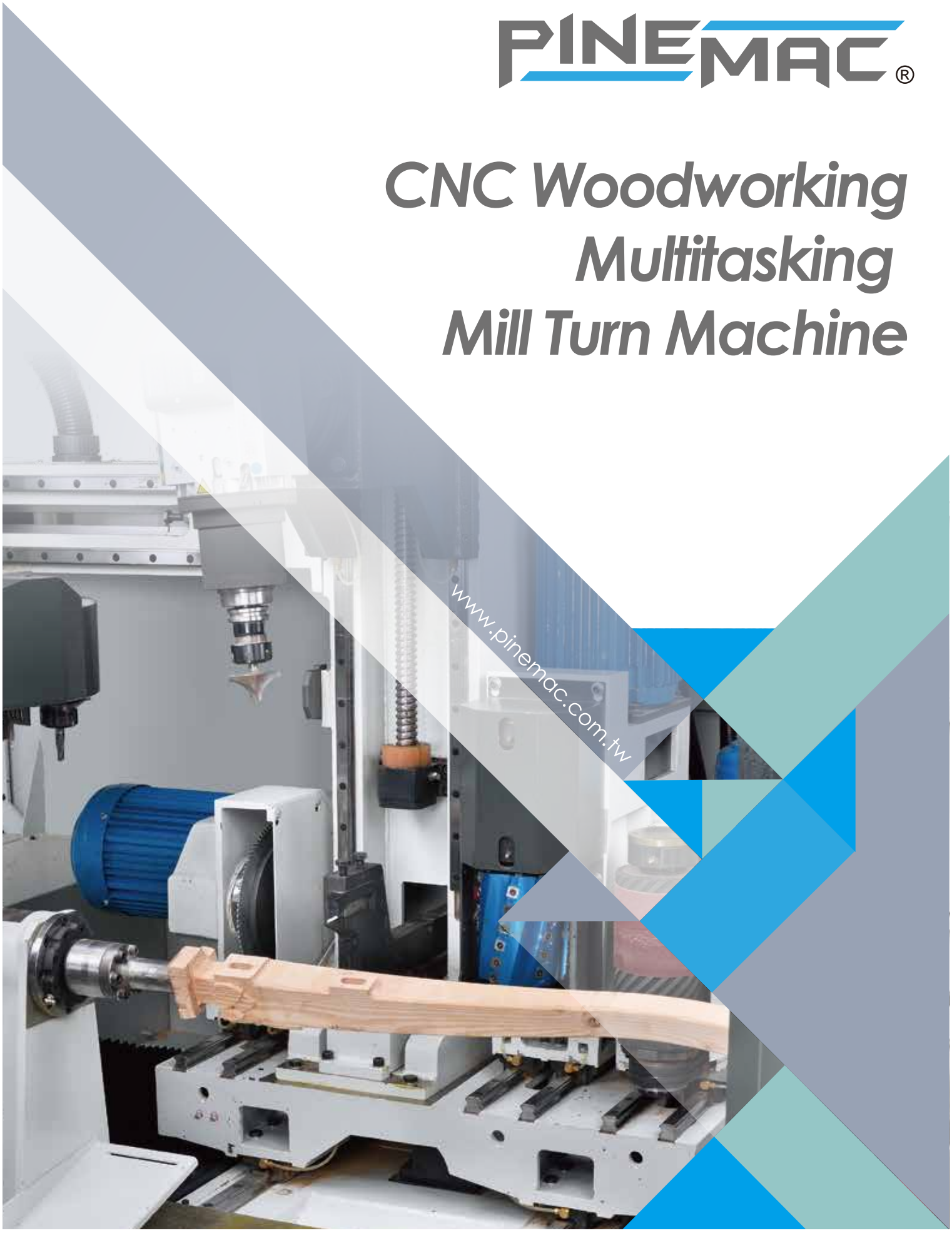

www.pinemac.com.tw

# MTC105 / MTC155

## CNC Mill Turn Machine

### A Multitasking Machine with Optimal Cost-To-Performance Ratio

Designed to combine several machining functions in one, the PINE MTC105 / MTC155 CNC Woodworking Multitasking Mill Turn Machine enables several machining processes to be accomplished at a time. This machine is equipped with a CNC controller for easy to learn and operate.

### MACHINE FEATURES:

- Combine several machining functions in one.
- 5-axis simultaneous machining makes the machine suitable for machining complex workpieces.
- Syntec CNC controller. (FANUC, SIEMENS controller optional)
- Router spindle speed 24,000 rpm.
- X, Y, Z-axis are transmitted by Ø32mm ball screws.
- X, Y, Z-axis are all mounted with high precision linear guideways.
- Highly rigid machine structure for high stability.
- Semi-enclosed splash guard.

## Major Mechanisms of

# MTC105 / MTC155

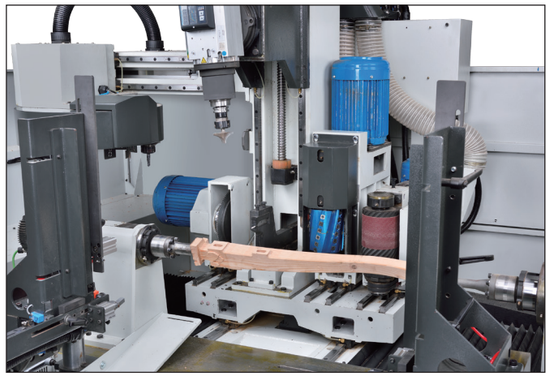

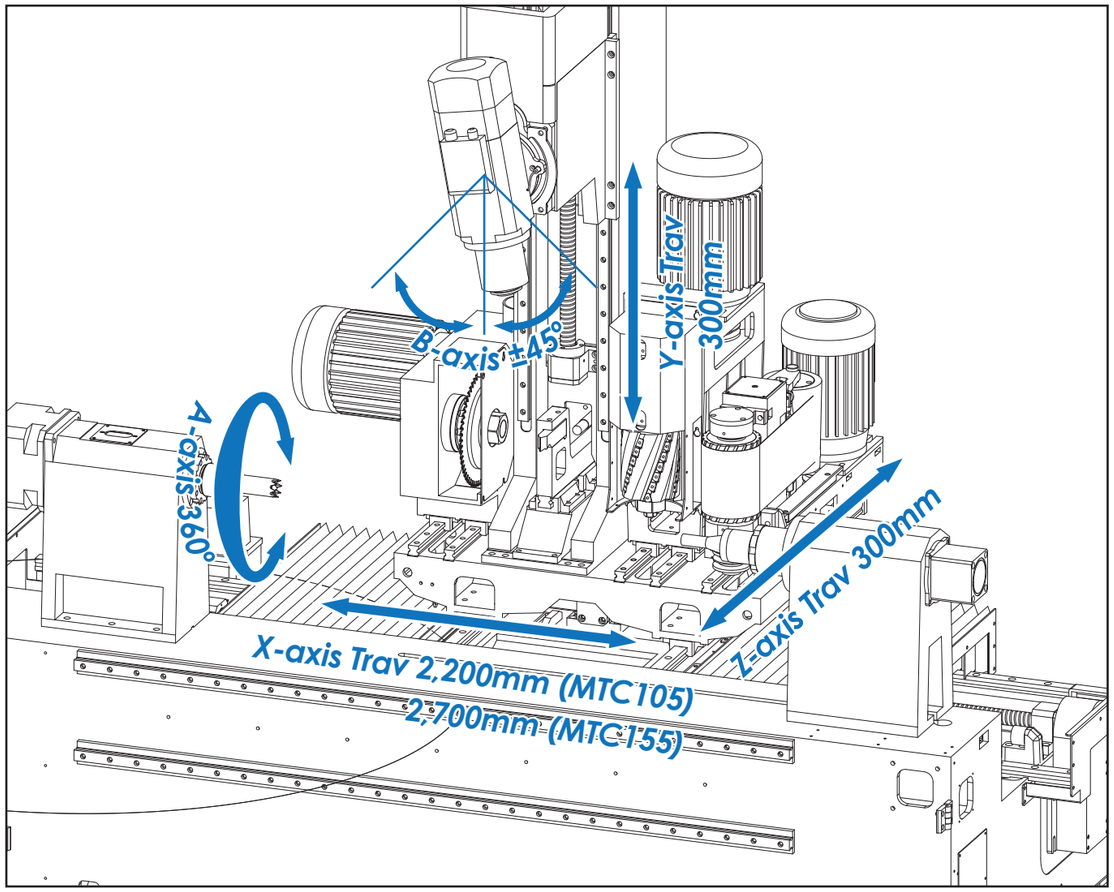

### SHAPER MECHANISM

- Suitable for fitting with helical cutterhead.
- Max. cutterhead size: Ø125mm (O.D.) and 150mm (L).
- Rough turning.
- Curve cutting.

### SANDING MECHANISM

- It conducts profile sanding after turning and shaping.
- Fine machining on curve and straight lines.

### ROUTER MECHANISM (B-AXIS)

- B-axis swiveling ±45°.
- Uses ISO 30 spindle taper for clamping the router bit.
- The router spindle speeds are variable, which is controlled through a frequency inverter.
- Max. router spindle speed: 24,000 rpm.
- Curve and straight line machining.
- Mortise machining
- Tenon machining
- Drilling

### TURNING MECHANISM

- One sawblade is used for finish turning.
- One turning tool is used for profile forming and finish turning.
- Centers (A-axis) are driven by servo motor.
- Min. indexing degree on centers (A-axis) is 0.01°.

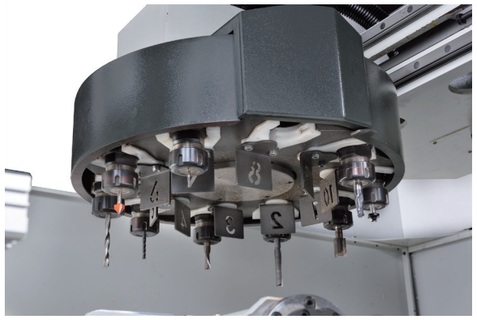

## 10 TOOLS
## CAROUSEL TYPE TOOL MAGAZINE

- Tool loading capacity : 10 tools
- Servo motor drive.
- Bi-direction, random tool selection for fast tool change.
- The magazine can be loaded with moulding cutter and drill.

## SYNTEC 200 MA
## CNC CONTROLLER

- Easy to learn and operate.
- 5-axis simultaneous machining.
- Rotational tool center point control (RTCP) function.

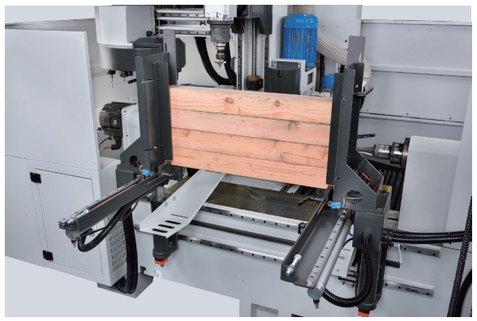

## WOOD STORAGE RACK

- The wood storage rack allows for automatic infeed of wood.
- In case of lack of wood material in the storage rack, the machine will pause and the warning lamp lights on to inform the operator.



# MACHINE SPECIFICATIONS

| MODEL | | | MTC105 | MTC155 |
|---|---|---|---|---|
| Capacity | Max. machining diameter | mm | Ø250 | |
| | Max. machining length | mm | 1,000 | 1,500 |
| Milling Spindle | B-axis travel | | ±45° | |
| | Taper of HDS spindle | | ISO30 | |
| | Max. spindle speed | rpm | 24,000 | |
| | Motor output | kW | 11 | |
| Turning Spindle | A-axis travel (Milling mode) | | 360° | |
| | Max. speed (Turning mode) | rpm | 1,500 | |
| | Motor output | kW | 3 | |
| Feed Axes | X-axis travel | mm | 1,700 | 2,200 |
| | Y-axis travel | mm | 400 | |
| | Z-axis travel | mm | 400 | |
| Other Cutting Motor | Sanding | | 2.2kW/3Hp | |
| | Shaping | | 5.5kW/7.5Hp | |
| | Sawing (Turning) | | 2.2kW/5Hp | |
| Others | Air pressure required | kg/cm² | 5~6.5 | |
| | Machine dimensions (LxWxH) | cm | 310x245x220 | 360x245x220 |
| | Packing dimensions (LxWxH) | cm | 330x245x230 | 390x245x230 |
| | Machine weight | kgs | 4,000 | 4,500 |

All specifications and design characteristics shown in this catalogue are subject to change without notice.

## STANDARD ACCESSORIES:

1. Syntec 200A H5 control
2. HSD spindle 24000rpm
3. Sand mechanism
4. Shape mechanism
5. Turning mechanism
6. Saw mechanism
7. Carrousel type magazine 10 tools
8. Auto load workpiece system
9. Auto power off (M30)
10. Automatic lubrication system
11. Electrical cabinet heat Exchanger
12. 3 color warning lamp
13. Operation Manual
14. Maintenance manual
15. Ethenet interface
16. USB interface

## OPTIONAL ACCESSORIES:

1. Tool length measurement

PINEMAC®


## Pine Precision Machinery Co.

302, Sec.2, Tanfu Rd.,TanZi Dist., Taichung 427, Taiwan

TEL: +886-4-2535 2112 FAX: +886-4-2535 2118

E-mail:pinemac@pinemac.com.tw http://www.pinemac.com.tw


1000 2019 07 REFINER DESIGN Co., LTD.